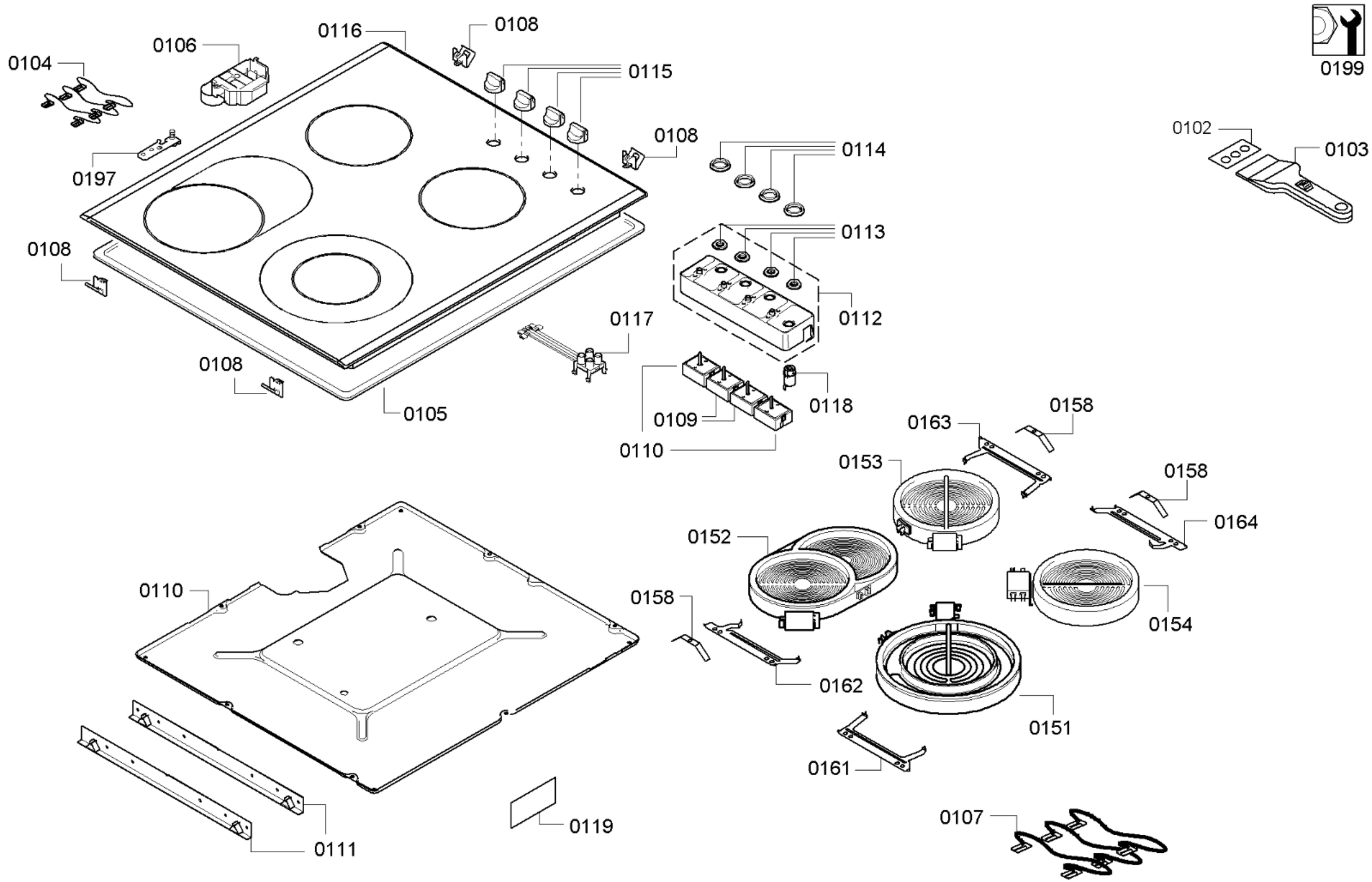

58300000135331 aet 000 a 1/1