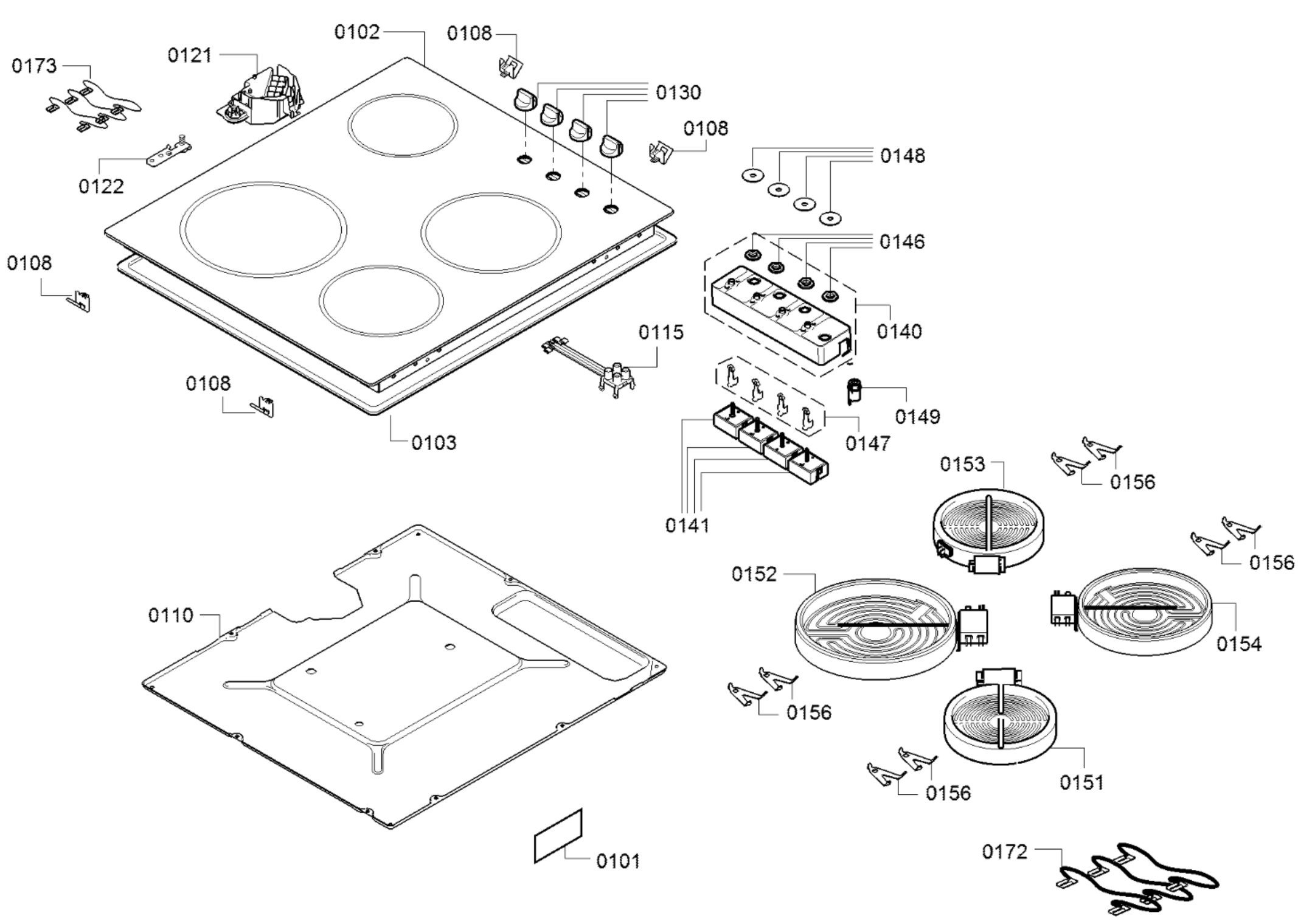

58300000169940 aet 000 c 1/1