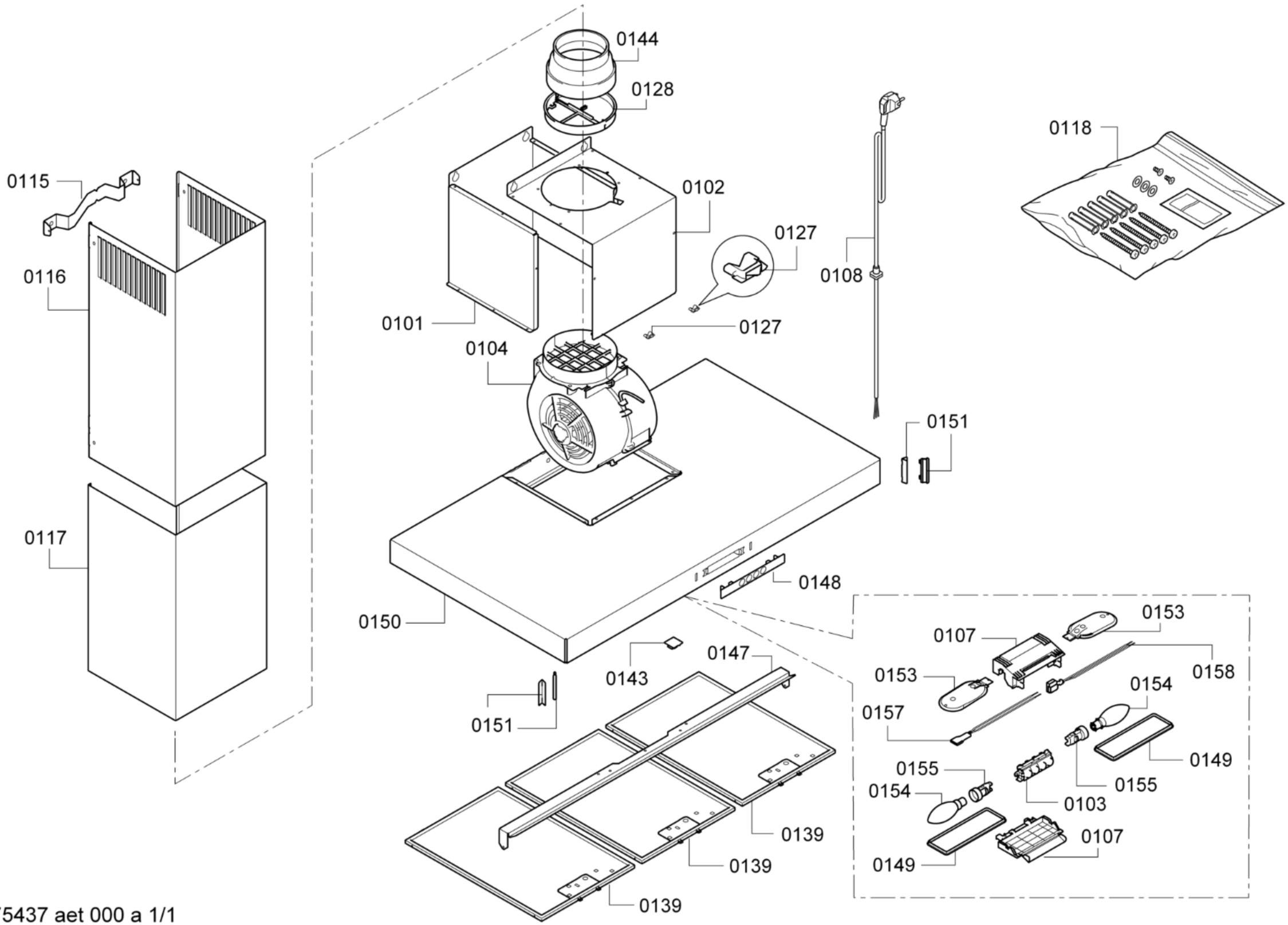

58300000175437 aet 000 a 1/1