0199

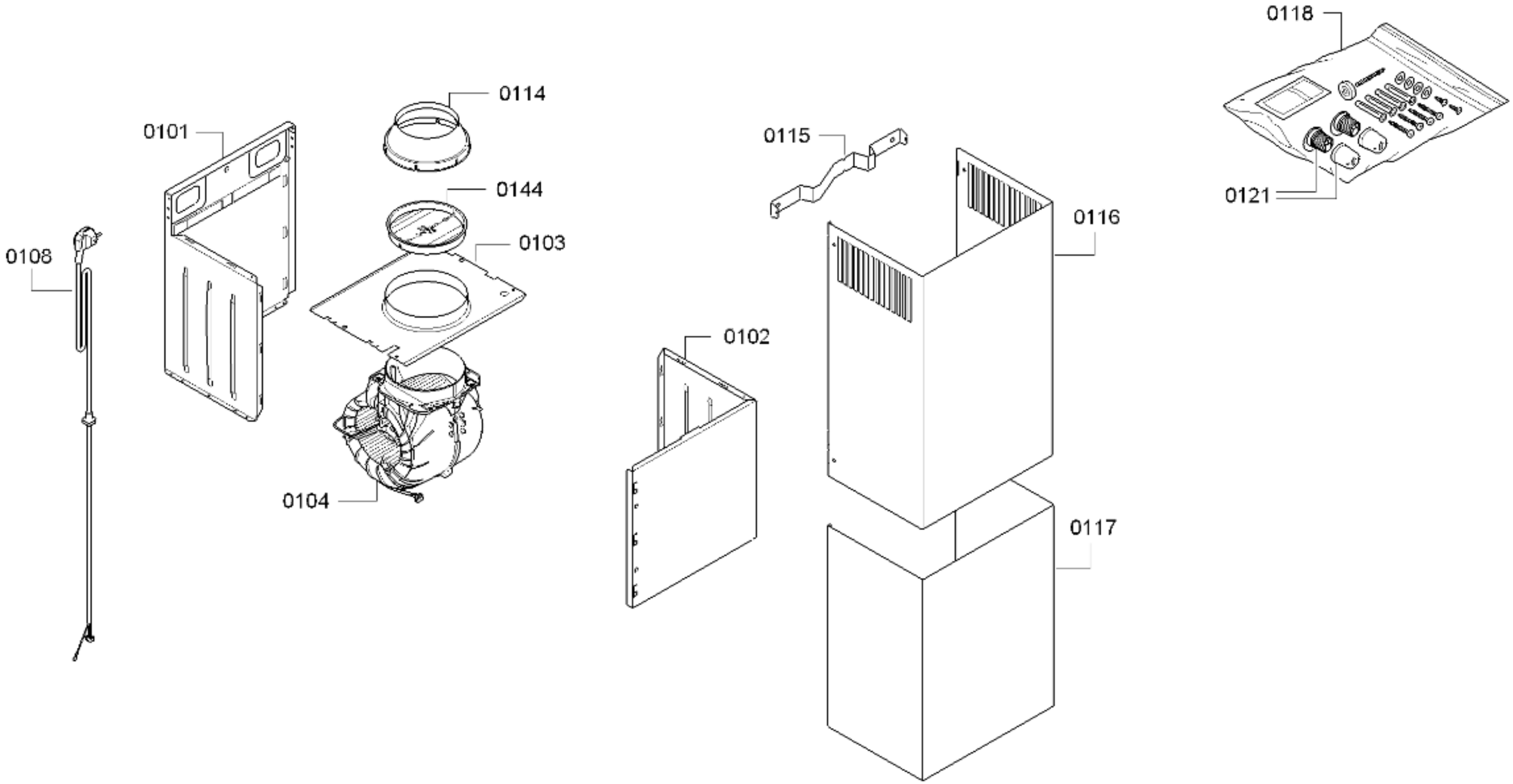

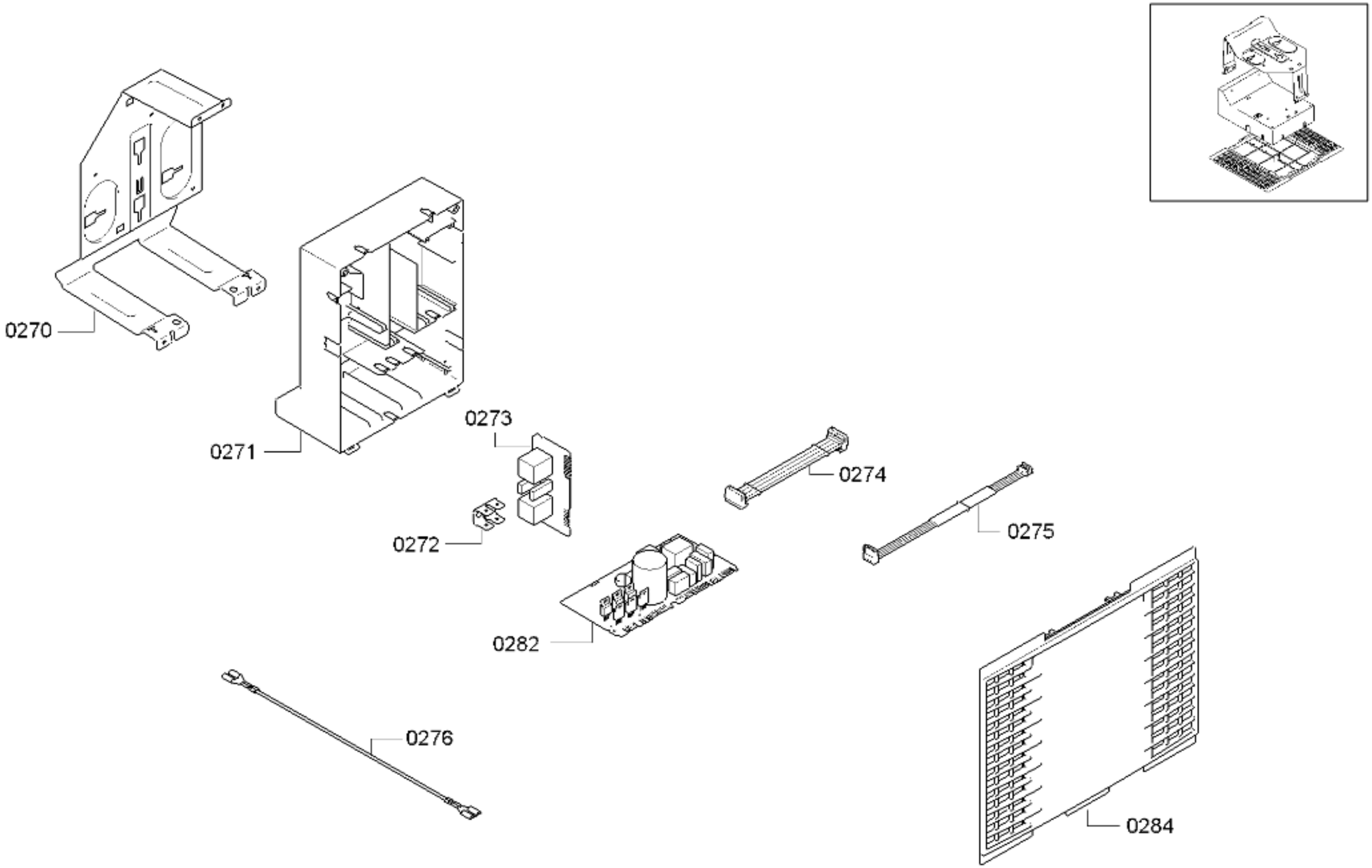

58300000176761 aet 000 b 2/3

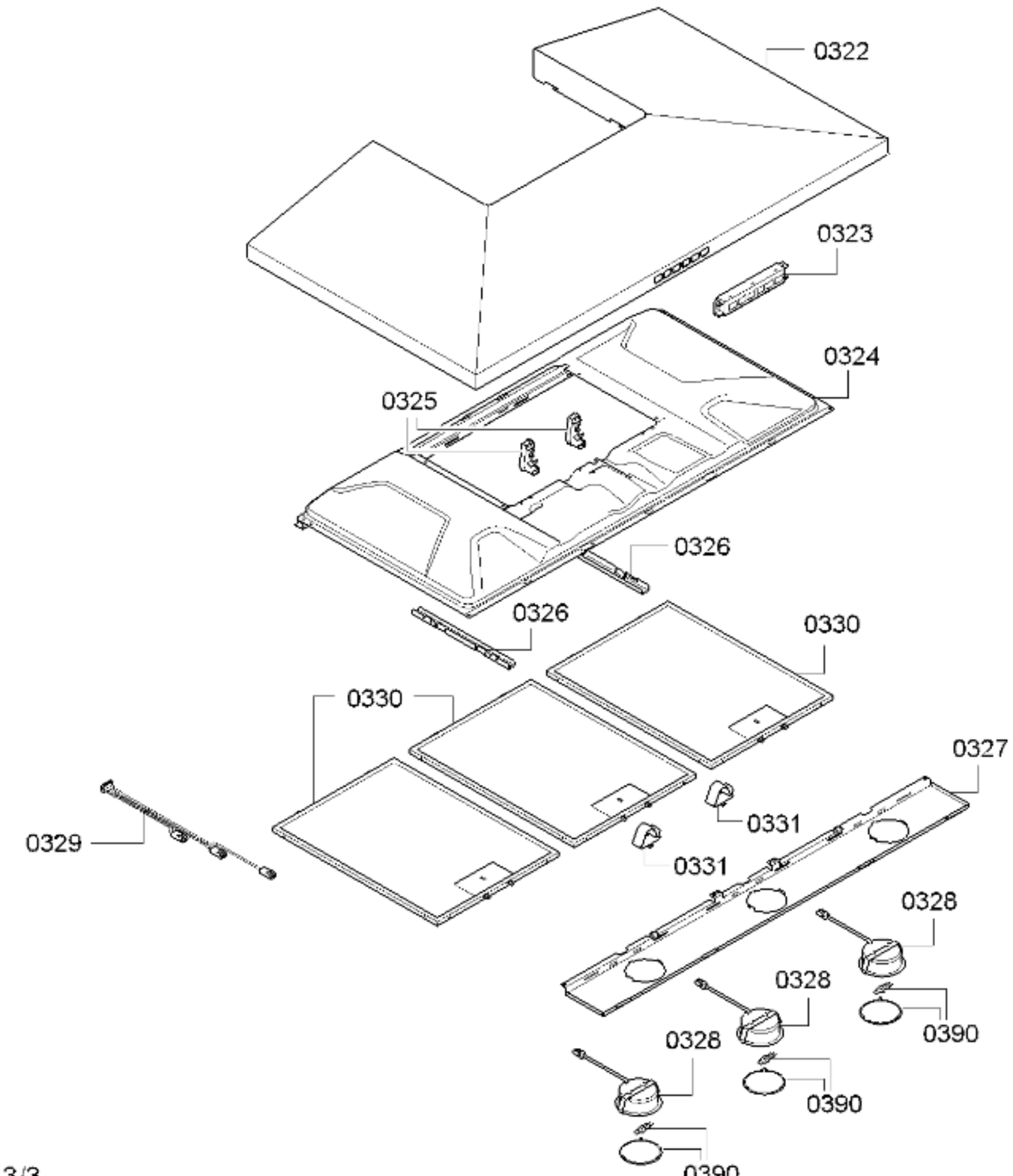

58300000176761 aet 000 b 3/3