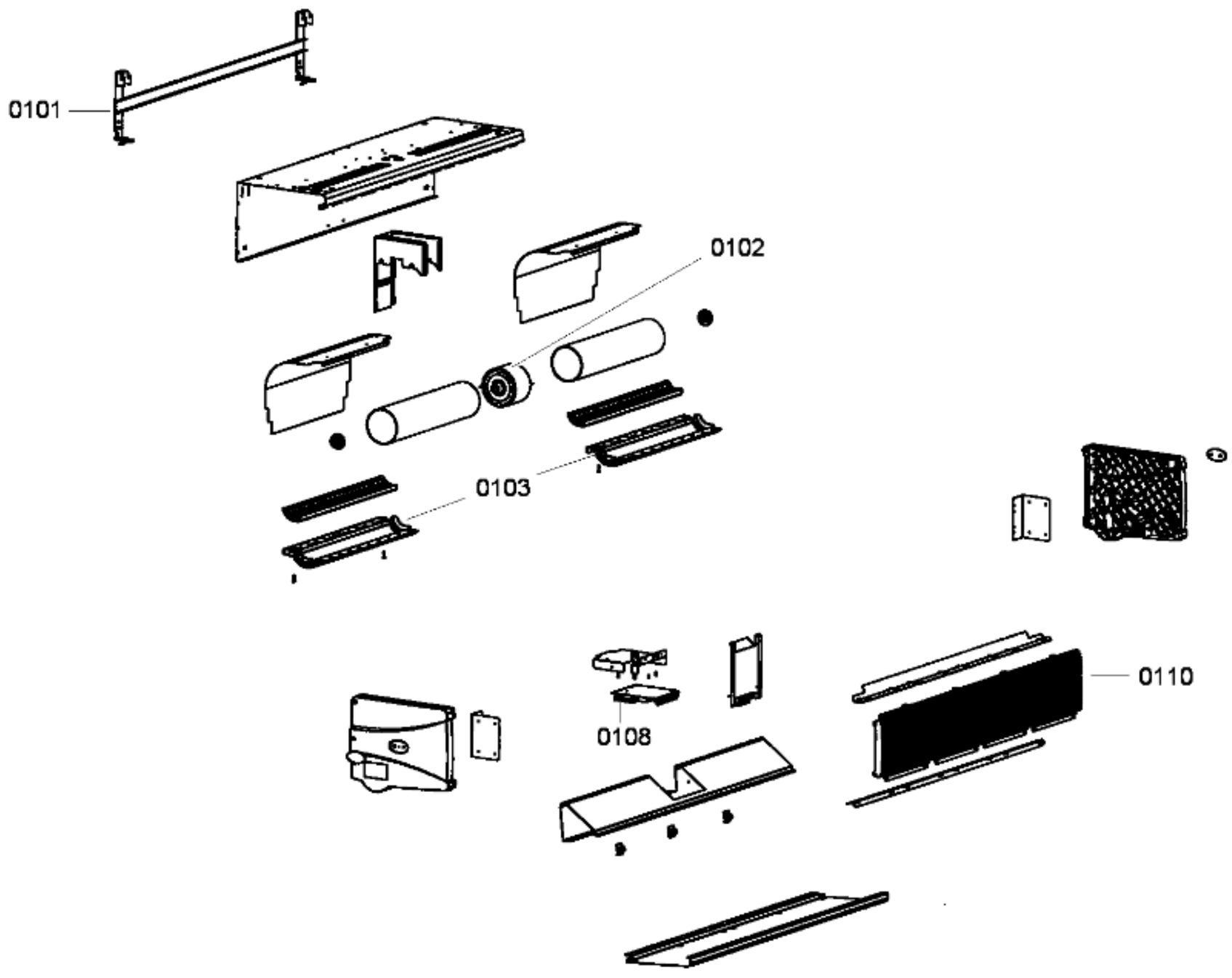

583000001 43275 aet 000 a 1/1