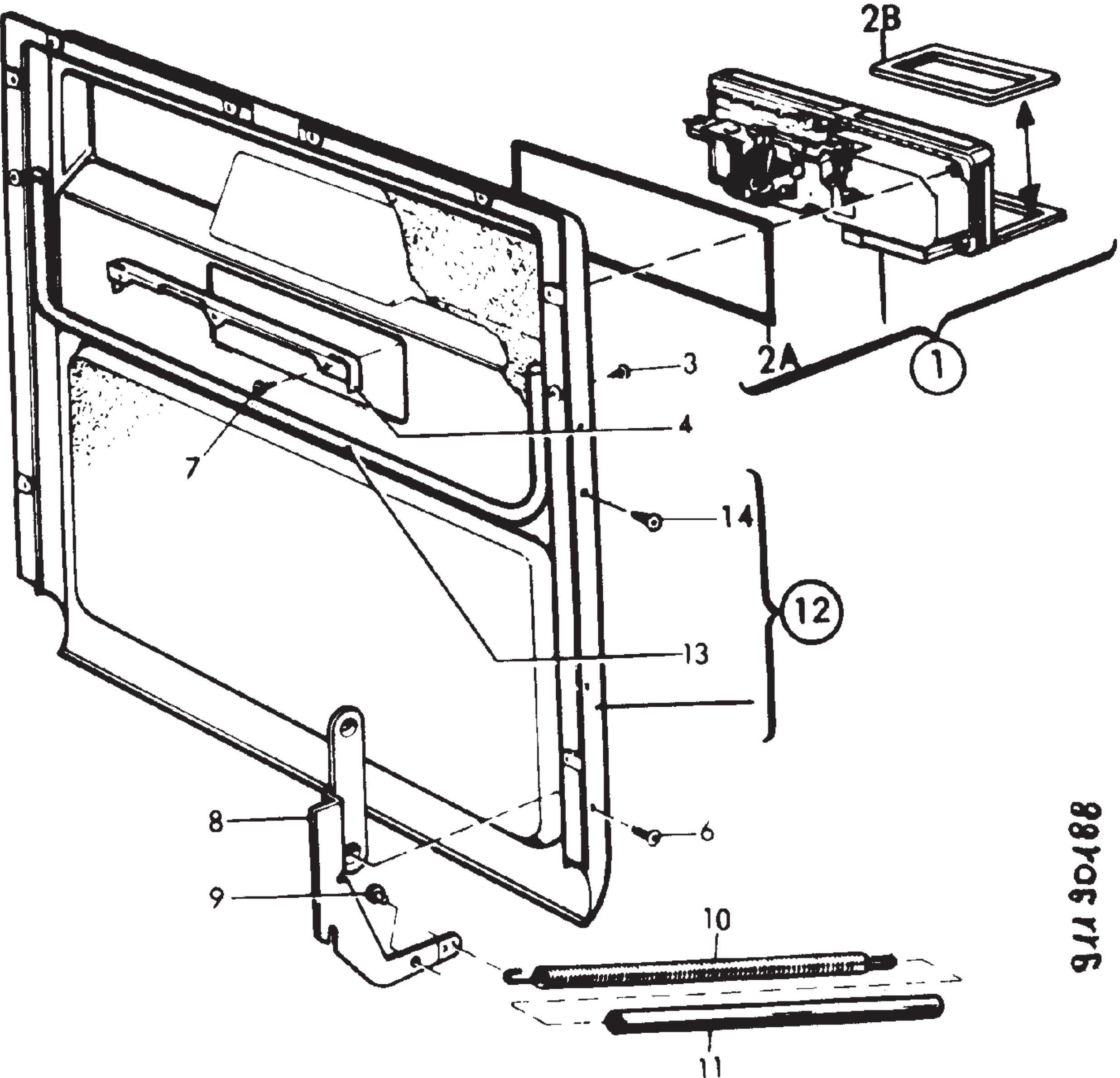

88YOE YY6