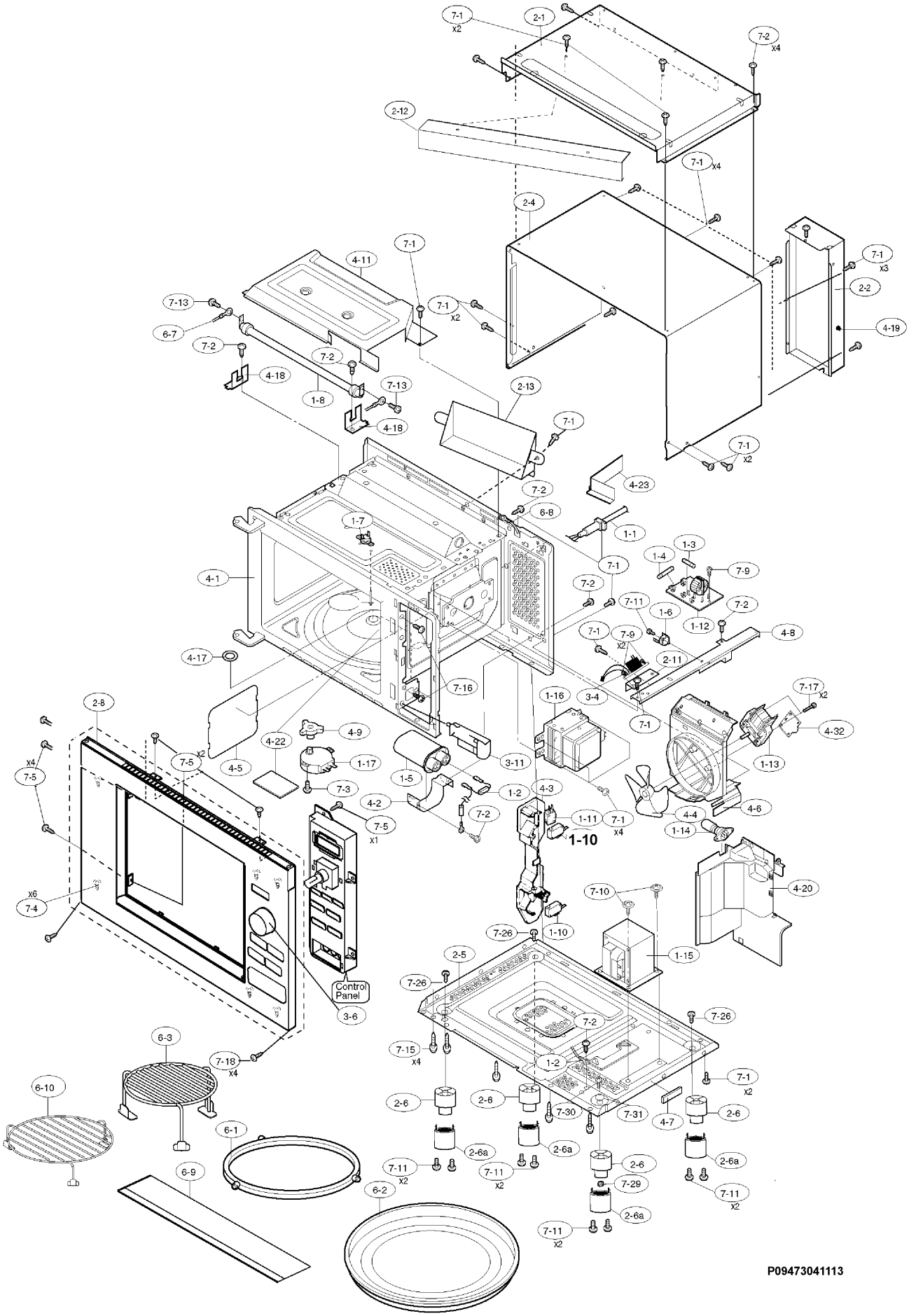
7-1 x2
2-1
7-2 x4
2-12
7-1 x4
2-4
7-1
4-11
7-1 x3
2-2
7-13
7-1 x2
4-19
6-7
7-2
7-2
4-18
1-8
7-13
2-13
4-18
7-1
7-1 x2
4-23
7-2
6-8
1-7
1-1
1-3
1-4
7-9
4-1
7-1
7-2
7-11
1-6
7-2
1-12
4-8
7-1
7-9 x2
2-11
4-17
7-16
1-16
3-4
7-17 x2
2-8
7-1
4-32
4-9
4-22
x2
7-5
4-5
1-17
3-11
1-13
x4
7-5
1-5
7-3
1-2
4-3
4-2
7-2
1-11
7-1 x4
4-4
4-6
7-5 x1
1-14
1-10
x6
7-4
7-10
4-20
7-26
1-10
1-15
2-5
7-26
Control Panel
3-6
7-2
7-26
6-3
7-15 x4
1-2
7-18 x4
7-1 x2
6-10
2-6
2-6
7-30
7-31
4-7
2-6
6-1
2-6a
2-6a
2-6
2-6a
7-11 x2
7-11 x2
7-29
7-11 x2
6-9
6-2
2-6a
7-11 x2
P09473041113