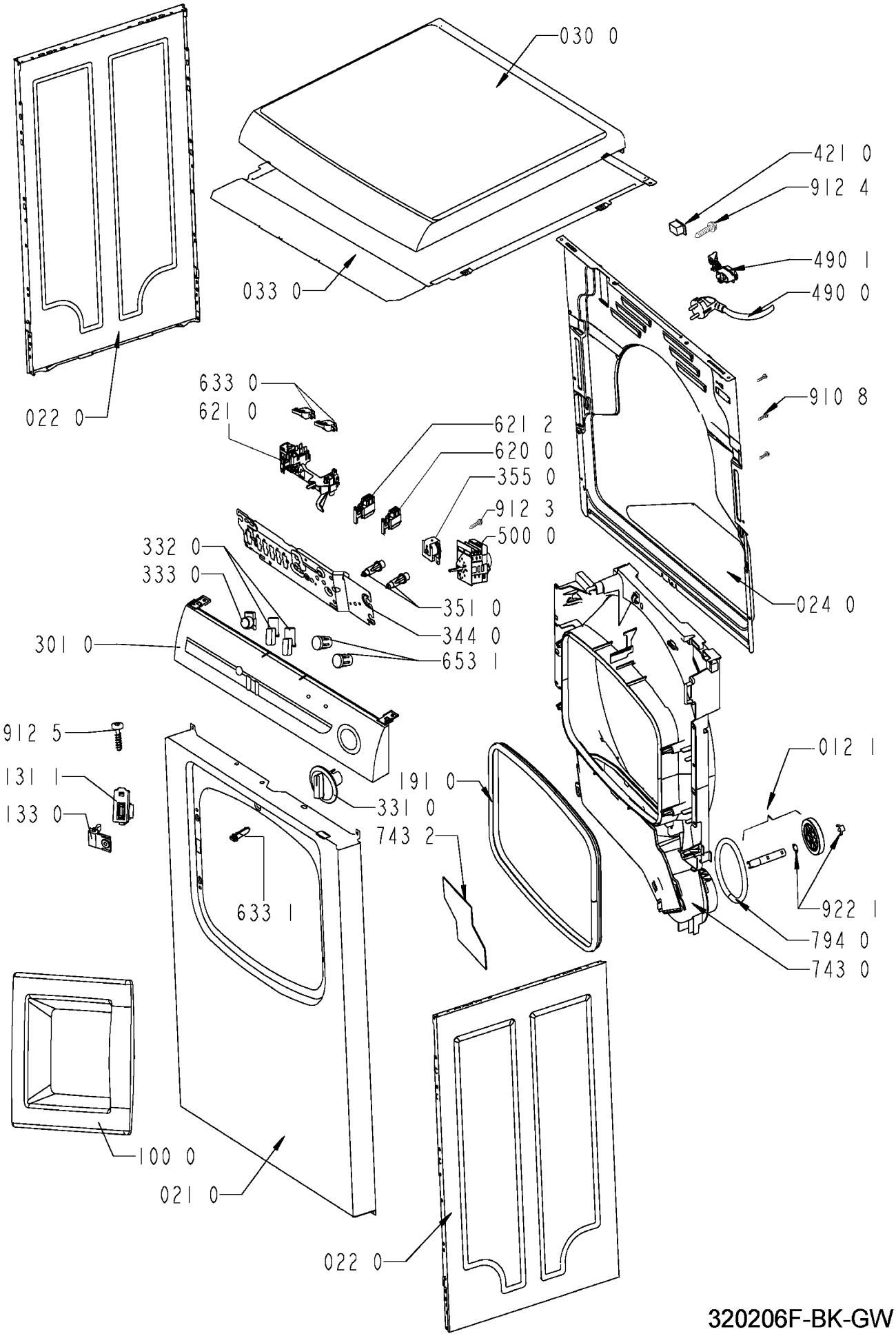

320206F-BK-GW